SURFACE FINISH	DRG.NO DCC-100N-FULL ASSY-외형도 .A3
~	

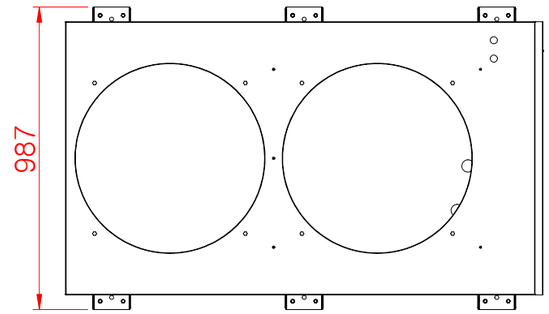

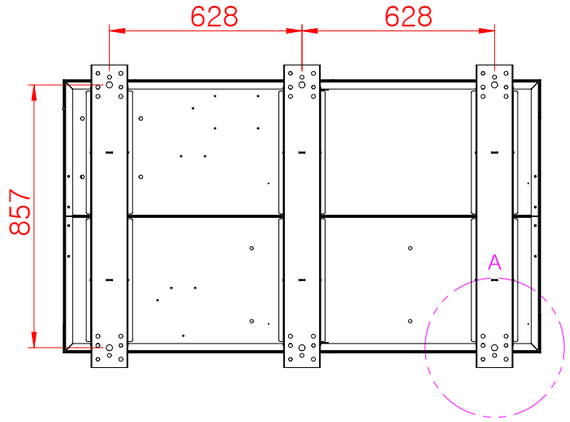

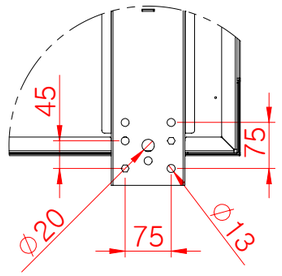

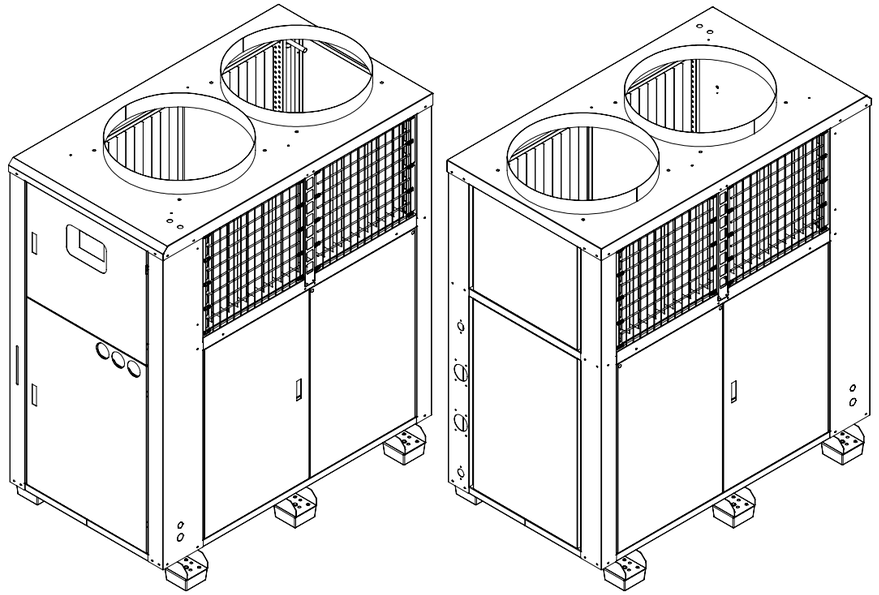

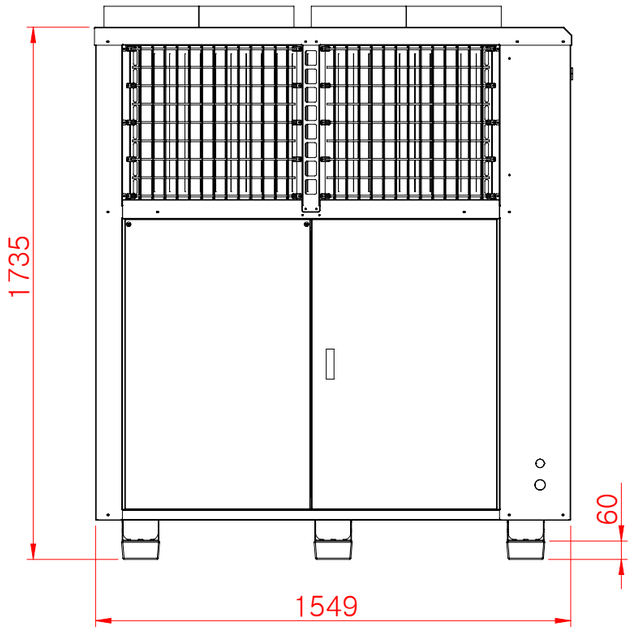

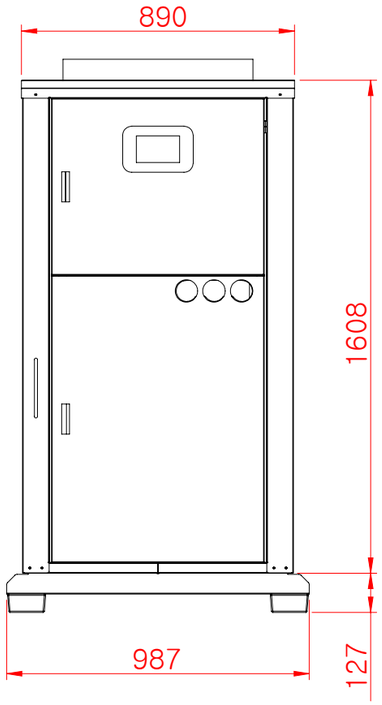

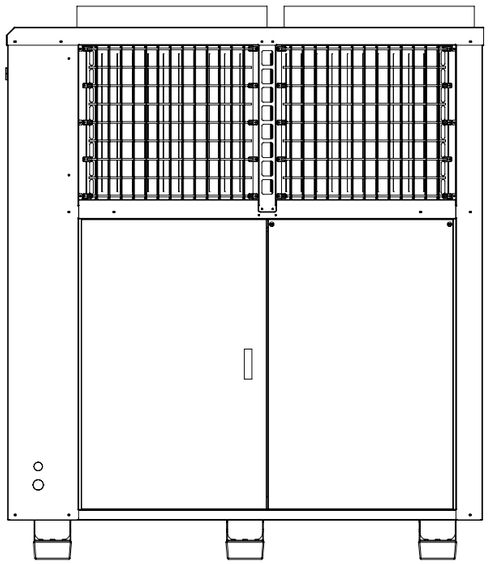

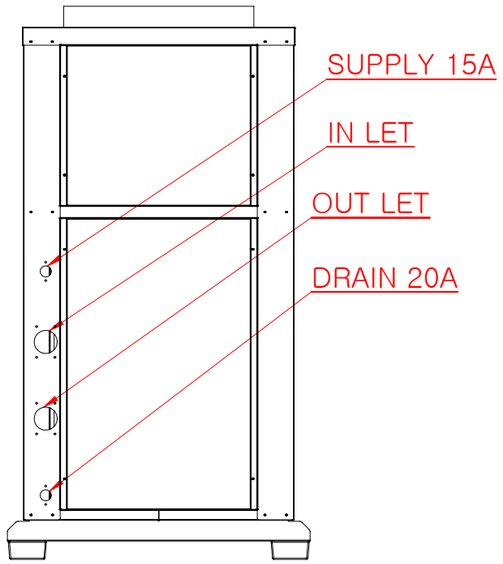

NOTE

1. 지정색 도장할 것.
2. 도시하고 지시없는 라운드 R3.
3. 날카로운 모서리 및 버어 제거할 것.
4. 밴딩R은 최소로 할 것.
5. 각 연결부 용접할 것.
6. 용접후 사상할 것.

SUFFIX	MARK	SUBJECT	ENC NO.	DATE	DRAWN	CHECKED	APPROVE
	3 X						
	2 X						
	1 X						

GENERAL TOLERANCE (MACHINING)			UNSPECIFIED CHAMFERS	C0.5	APPROVE		TITLE	10마력 외형도	Q'TY	1EA
LIMITS OVER ~ TO	MINUTENESS	NORMAL	UNSPECIFIED RADII	R1	CHECKED		ASS'Y	DCC-N075	SCALE	1:20
0.5 ~ 6	±0.05	±0.1	HEAT TREATMENT HARDNESS		DISIGNED	J.H.MOON	MODEL	---	MAT.	---
6 ~ 30	±0.1	±0.2							W,T	198.13kg
30 ~ 120	±0.15	±0.3	HEAT TREATMENT METHOD		DRAWN	J.H.MOON	PROJECT NAME	CHILLER	DRG.NO .A3	DCC-100N-FULL ASSY-외형도
120 ~ 315	±0.2	±0.5								
315 ~ 1000	±0.3	±0.8								
1000 ~ 2000	±0.5	±1.2	SURFACE TREATMENT	PAINT	DATE	2021-03-15				
2000 ~ 4000	±0.8	±2.0								

DAEIL CO., LTD

A3 (297X420)